REVISION HISTORY				
ZONE	REV	DESCRIPTION	DATE	APPROVED

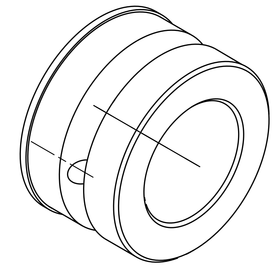

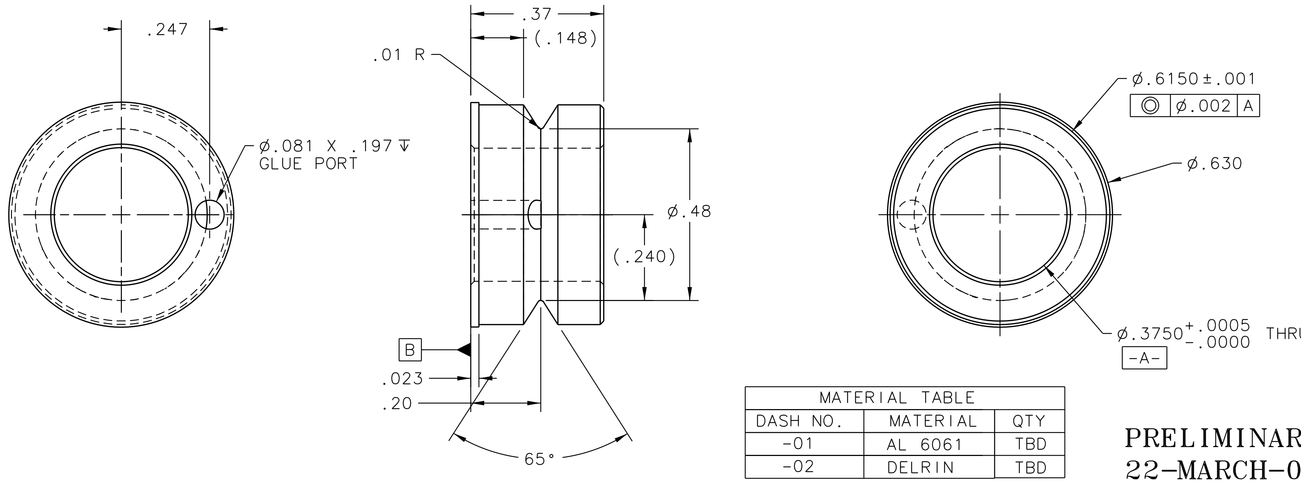

MATERIAL TABLE		
DASH NO.	MATERIAL	QTY
-01	AL 6061	TBD
-02	DELRIN	TBD

PRELIMINARY
22-MARCH-07

DOCUMENT CONTROL STAMP

MATERIAL
SEE TABLE

FINISH
MACHINED SURFACES 125 UNLESS OTHERWISE NOTED
DEBURR & BREAK ALL SHARP EDGES

DO NOT SCALE DRAWING

DIM & TOL PER ASME Y14.5
UNLESS OTHERWISE SPECIFIED
DIMENSIONS ARE IN INCHES
TOLERANCES ARE:

FRACTIONS	DECIMAL	ANGLES
± N/A	.X ± .1	± .50°
	.XX ± .01	
	.XXX ± .005	

THIRD ANGLE PROJECTION

TRACKING NO.
N/A

APPROVALS	DATE
DRAWN C.T.KOSCS	22MAR07
CHECKED	
APPROVED	
APPROVED	

Jefferson Lab
Thomas Jefferson National Accelerator Facility
NEWPORT NEWS, VIRGINIA
UNITED STATES DEPARTMENT OF ENERGY

HALL D 12GEV UPGRADE
CENTRAL DRIFT CHAMBER
DONUT GLUE PLUG, TUBE

SIZE C | DWG. NO. 19-03-07-CTK-00004 | REV. -

SCALE 5:1 | USED ON ASSY NO. | SHEET 1 OF 1