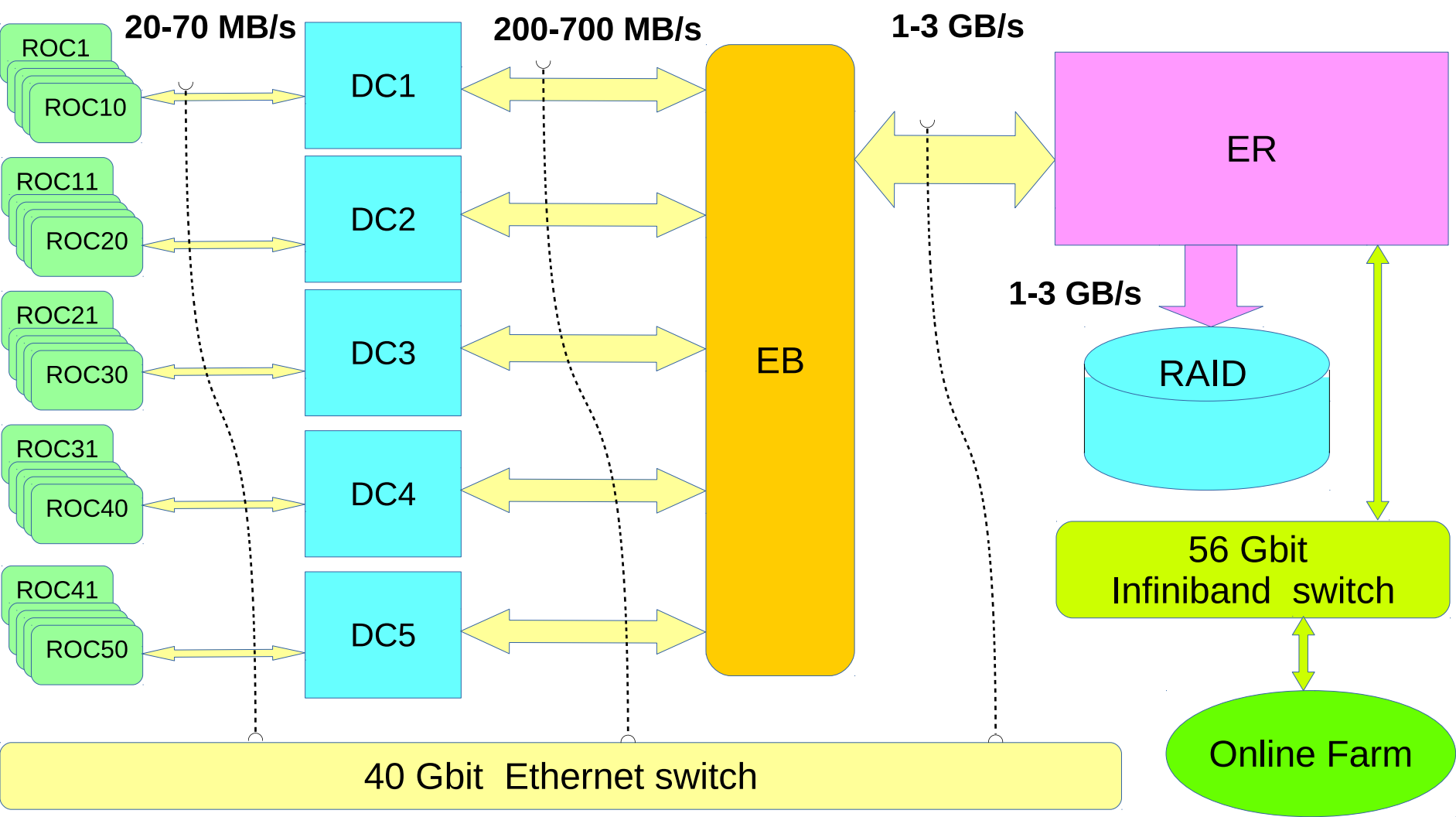
20-70 MB/s
200-700 MB/s
1-3 GB/s
ROC1
ROC10
ROC11
ROC20
ROC21
ROC30
ROC31
ROC40
ROC41
ROC50
DC1
DC2
DC3
DC4
DC5
EB
ER
1-3 GB/s
RAID
56 Gbit
Infiniband switch
Online Farm
40 Gbit Ethernet switch