REVISION HISTORY				
ZONE	REV	DESCRIPTION	DATE	APPROVED

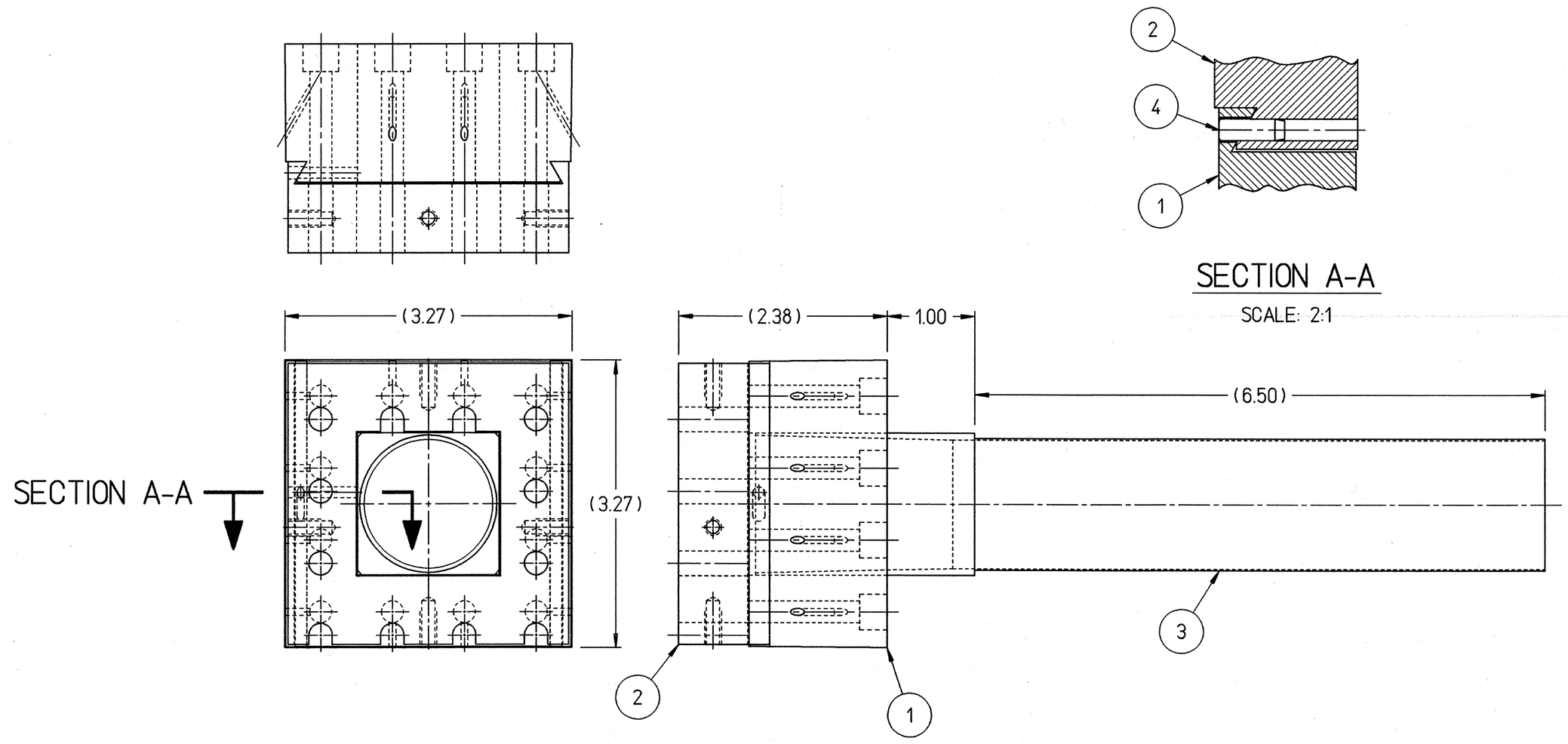

RUN CONFIGURATION

SECTION A-A

SCALE: 2:1

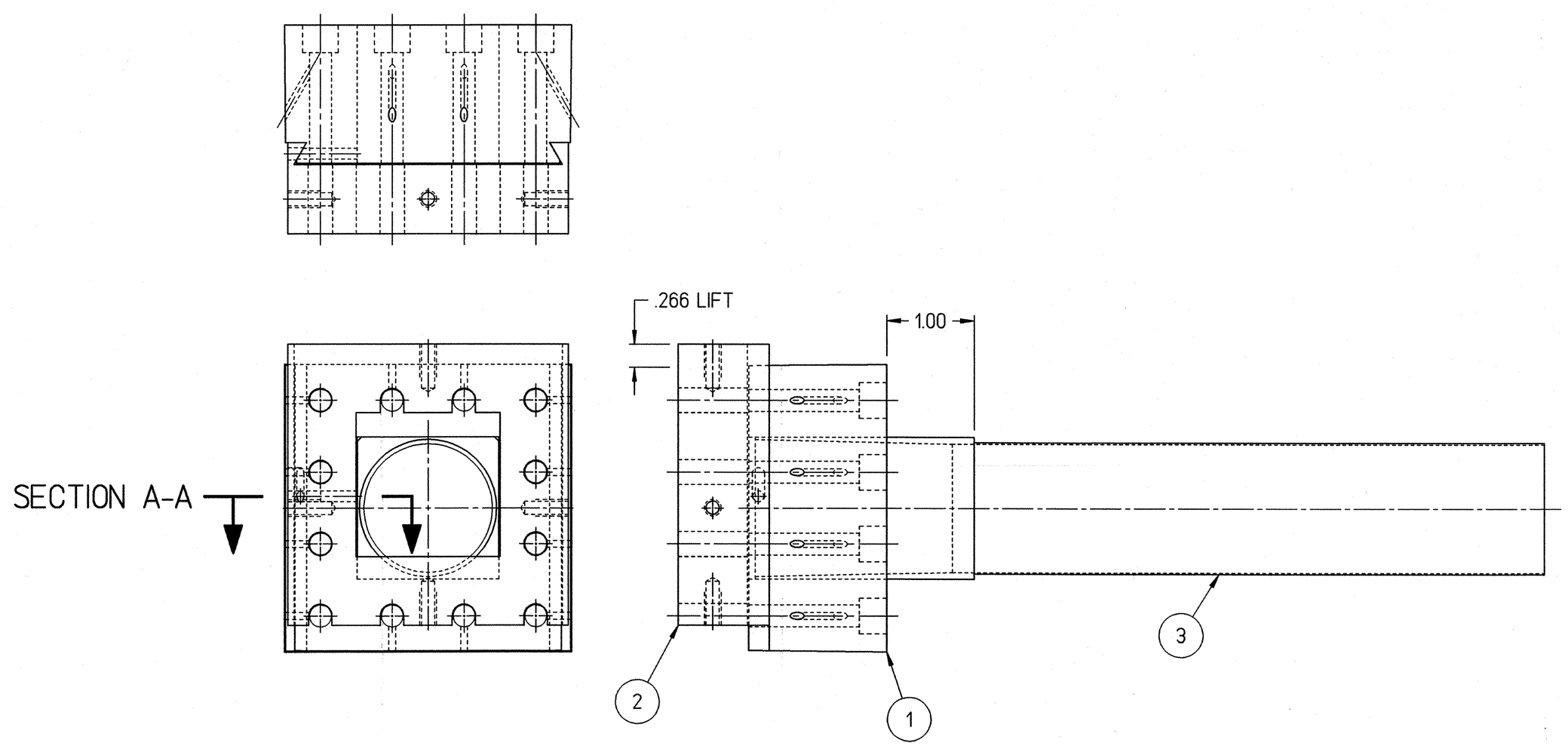

CALIBRATION CONFIGURATION

NOTES:

1. APPROXIMATE WEIGHT OF TUNGSTEN ASSEMBLY = 12 LBS
2. ONCE INSTALLED DO NOT PULL OUT SUPPORT ,ITEM 3, MORE THAN 2 INCHES UNLESS REMOVING TOTALLY.

QTY REQD	ITEM NO.	PART OR IDENTIFYING NO.	NOMENCLATURE OR DESCRIPTION	MATERIAL SPECIFICATION	NOTES
1	4		DOWEL PIN .125 DIA (NOMINAL) X 3/8 LONG	18-8 STAINLESS STEEL GROUND .0002 OVER NOMINAL	
1	3	66813-D-04131	COLLIMATOR SUPPORT		
1	2	66813-D-04130	COLLIMATOR SHUTTER		
1	1	66813-D-04129	COLLIMATOR		
-01 ASSY		PARTS LIST			

DOCUMENT CONTROL STAMP

MATERIAL: SEE PARTS LIST

FINISH MACHINED SURFACES NA UNLESS OTHERWISE NOTED

DEBURR & BREAK ALL SHARP EDGES

DO NOT SCALE DRAWING

DIM & TOL PER ASME Y14.5 UNLESS OTHERWISE SPECIFIED
DIMENSIONS ARE IN INCHES
TOLERANCES ARE:
FRACTIONS ± NA DECIMAL X ± NA XX ± NA XXX ± NA ANGLES ± NA

THIRD ANGLE PROJECTION

TRACKING NO. /wbs/6/hemler/66000 /4100/66813d04128

APPROVALS	DATE
DRAWN P. R. HEMLER	6-25-04
CHECKED	7/2/04
APPROVED	7/2/04
APPROVED	7/12/04

Jefferson Lab
Thomas Jefferson National Accelerator Facility
NEWPORT NEWS, VIRGINIA
UNITED STATES DEPARTMENT OF ENERGY

PRIMEX
HYCAL
COUNTER BOX
COLLIMATOR ASSEMBLY

SIZE D | DWG. NO. 66813-D-04128 | REV. -

SCALE 1:1 | USED ON ASSY NO. 66813-D-03772 | SHEET 1 OF 1

Me10