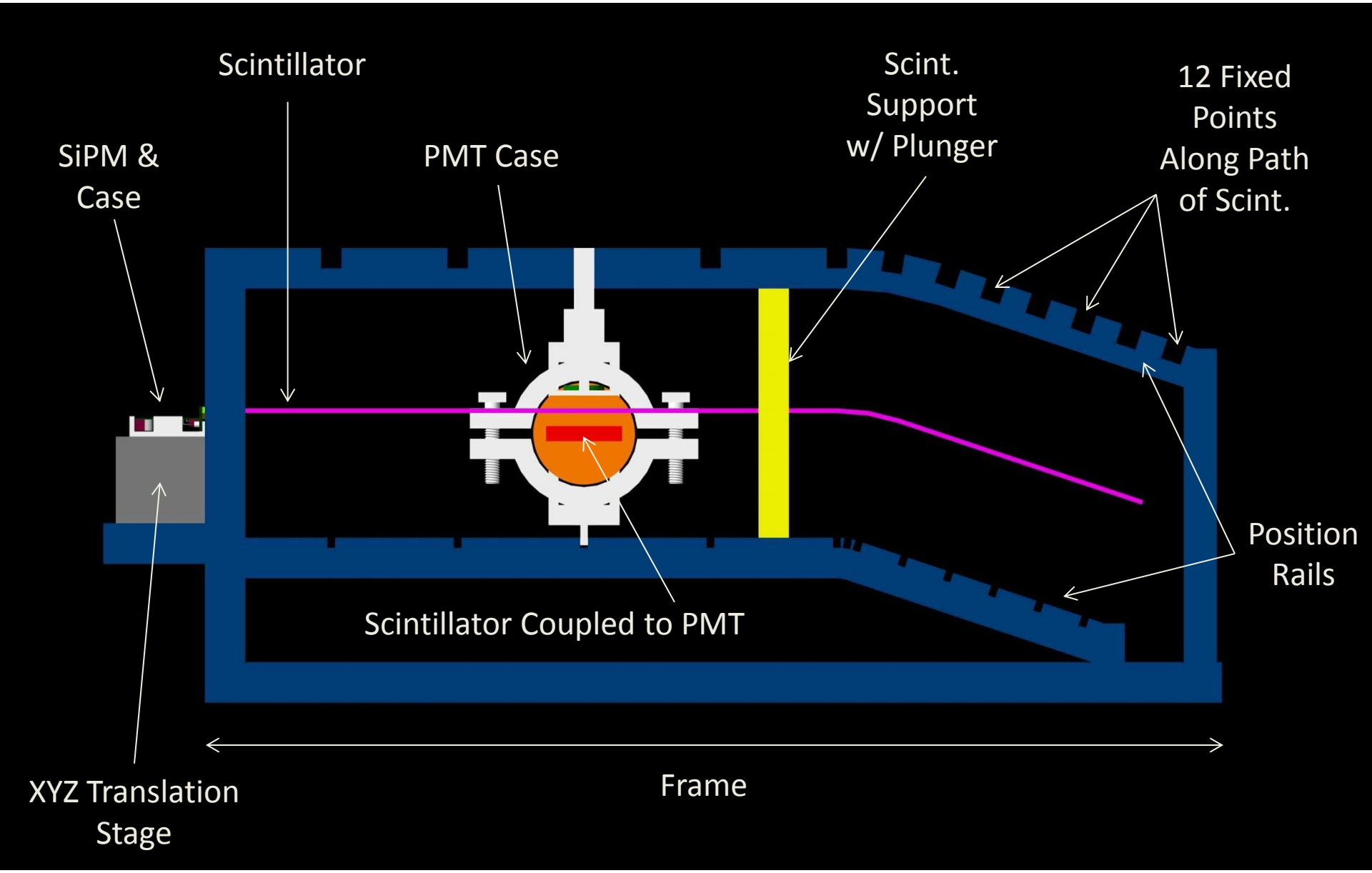
Scintillator
SiPM &
Case
PMT Case
Scint.
Support
w/ Plunger
12 Fixed
Points
Along Path
of Scint.
Position
Rails
Scintillator Coupled to PMT
XYZ Translation
Stage
Frame

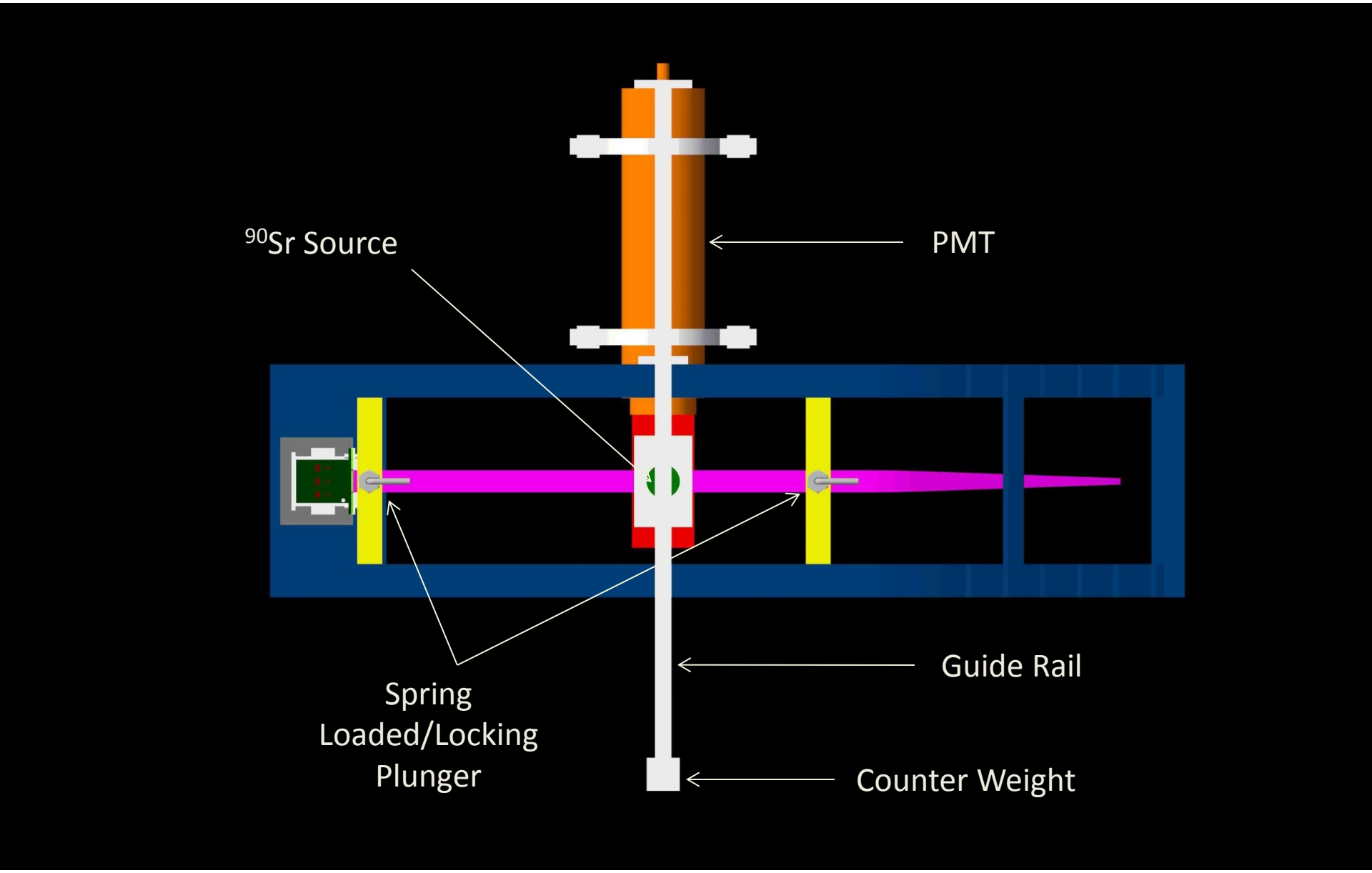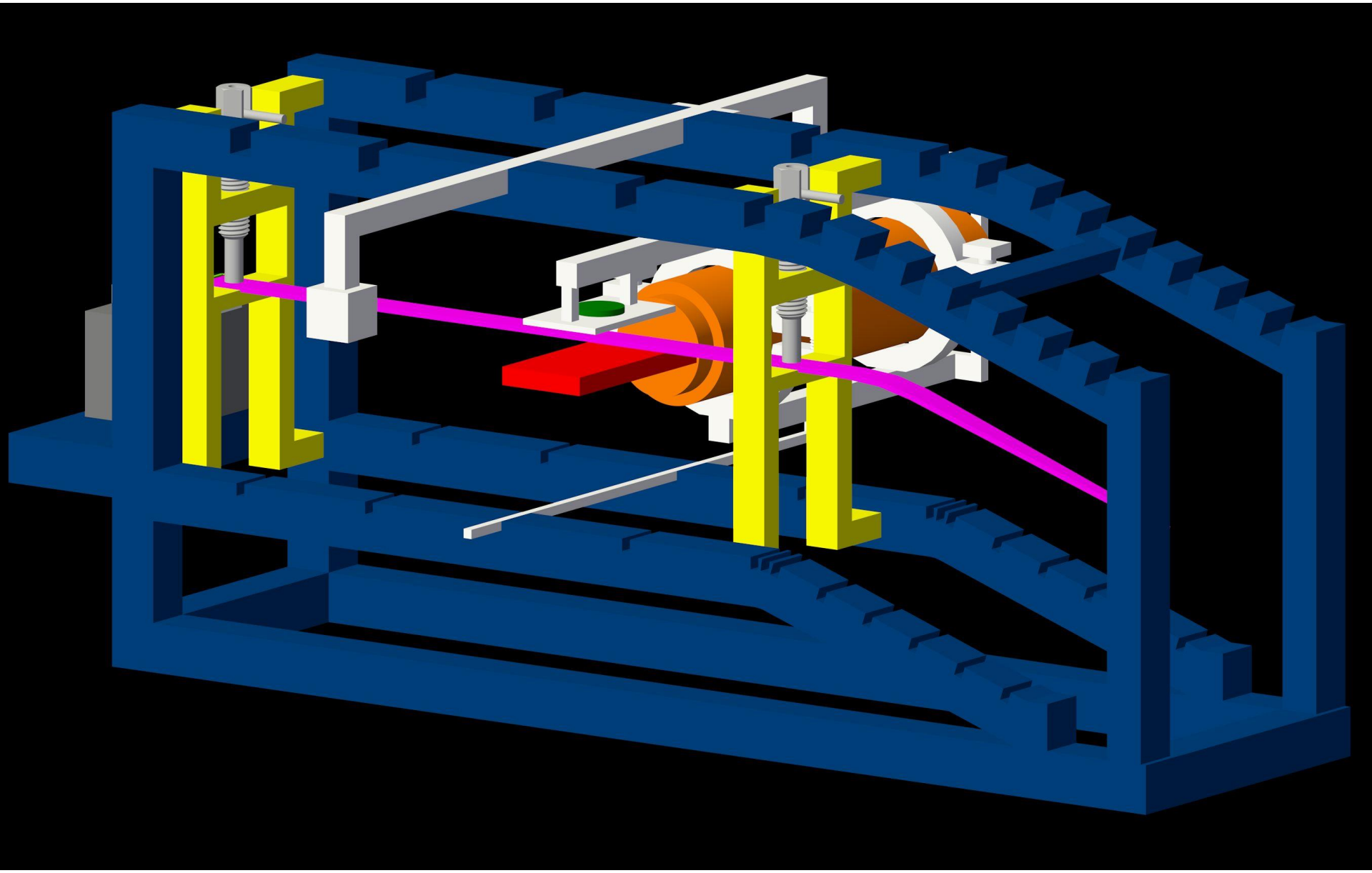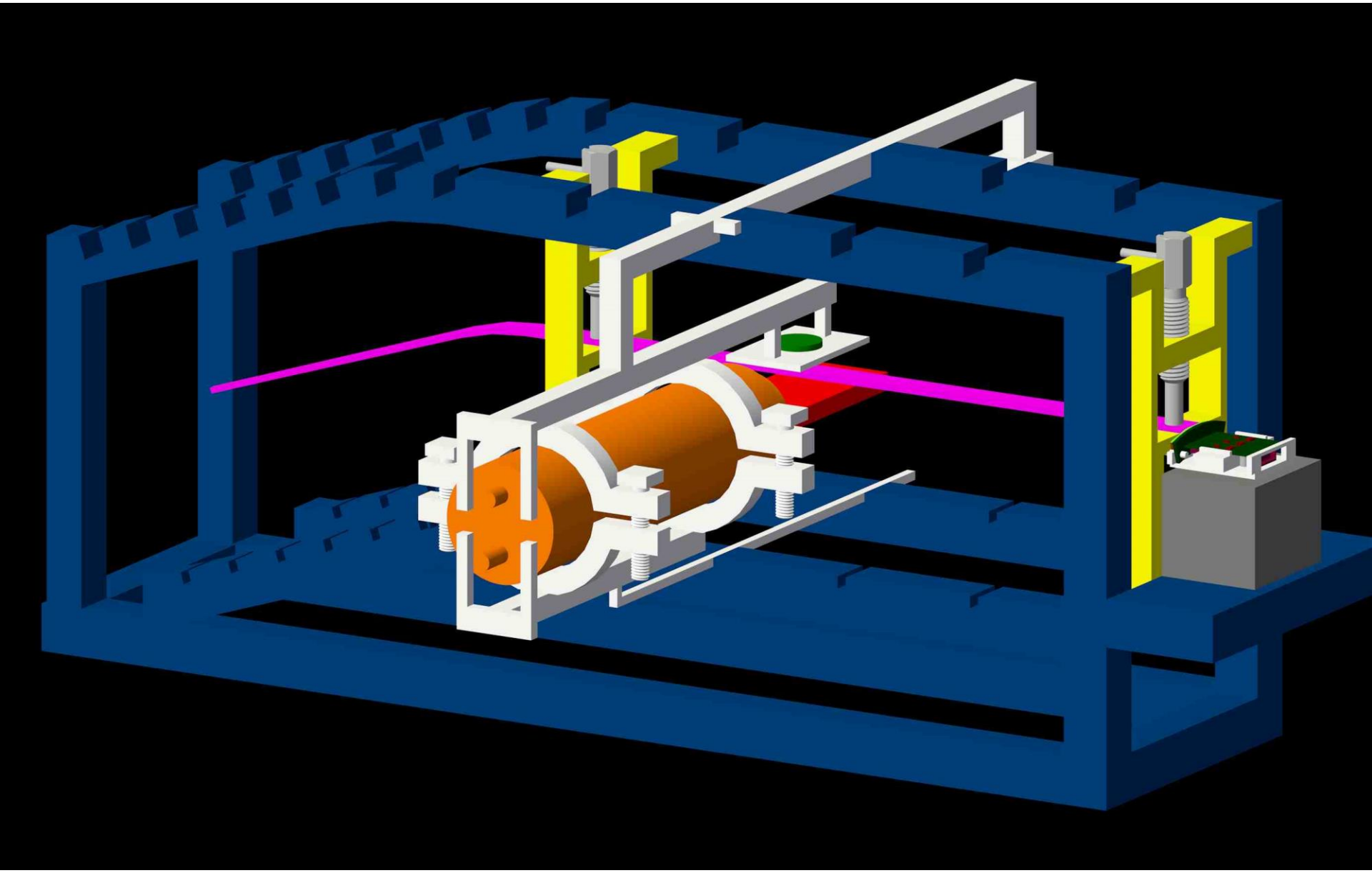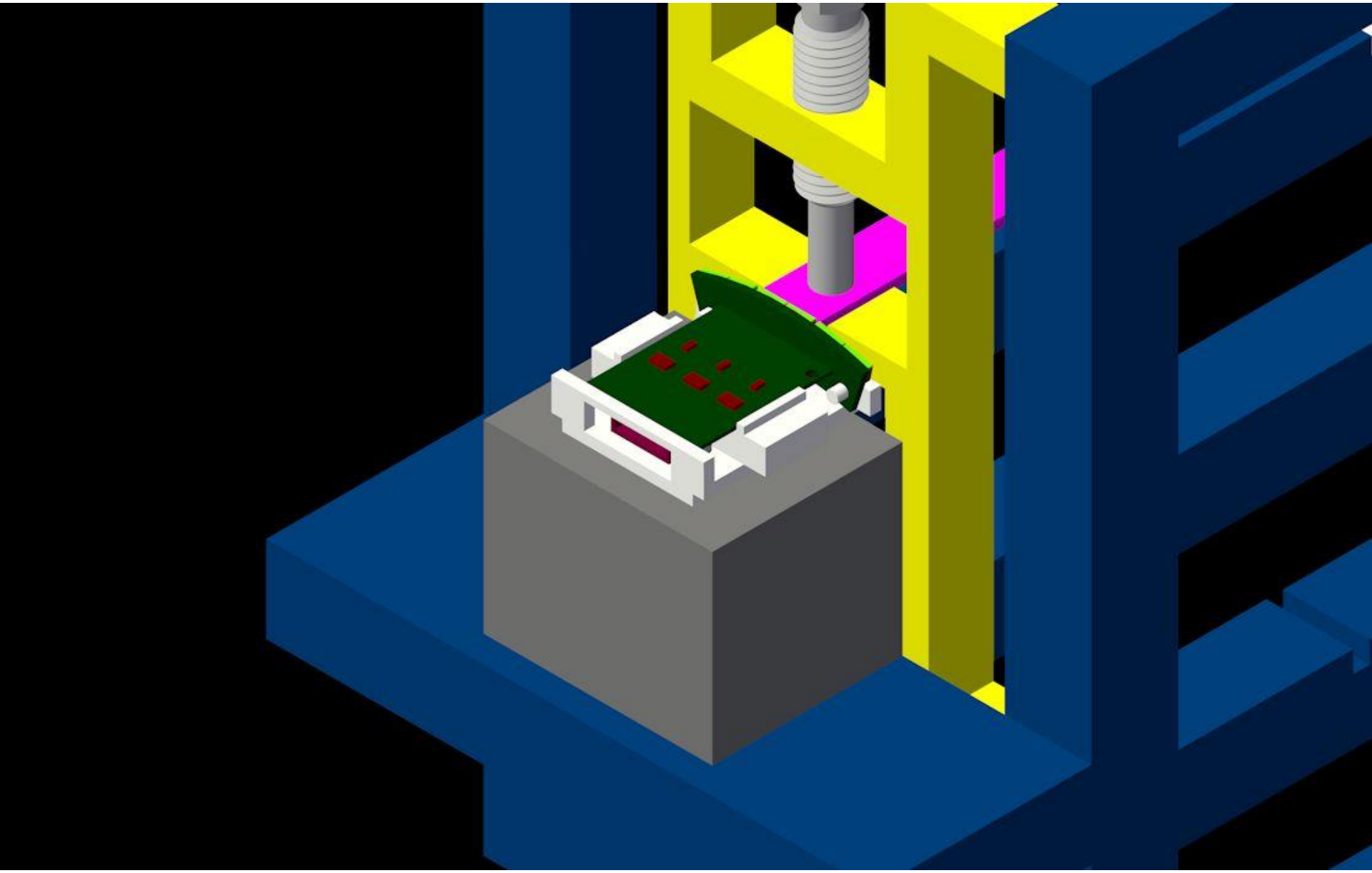
^{90}Sr Source
PMT
Guide Rail
Spring Loaded/Locking Plunger
Counter Weight