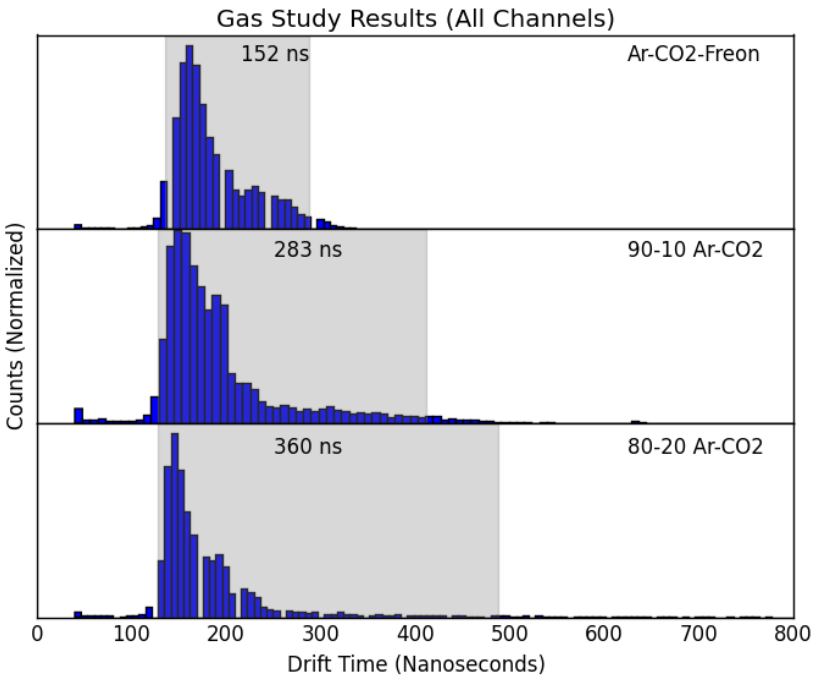
Gas Study Results (All Channels)
152 ns
Ar-CO2-Freon
283 ns
90-10 Ar-CO2
360 ns
80-20 Ar-CO2
Counts (Normalized)
0
100
200
300
400
500
600
700
800
Drift Time (Nanoseconds)

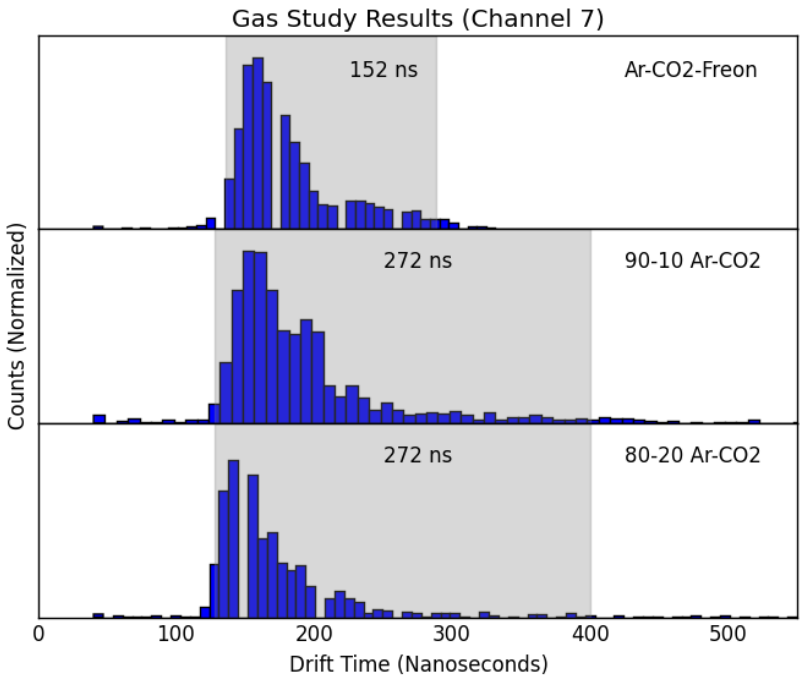
Gas Study Results (Channel 7)
152 ns
Ar-CO2-Freon
272 ns
90-10 Ar-CO2
272 ns
80-20 Ar-CO2
Counts (Normalized)
0
100
200
300
400
500
Drift Time (Nanoseconds)

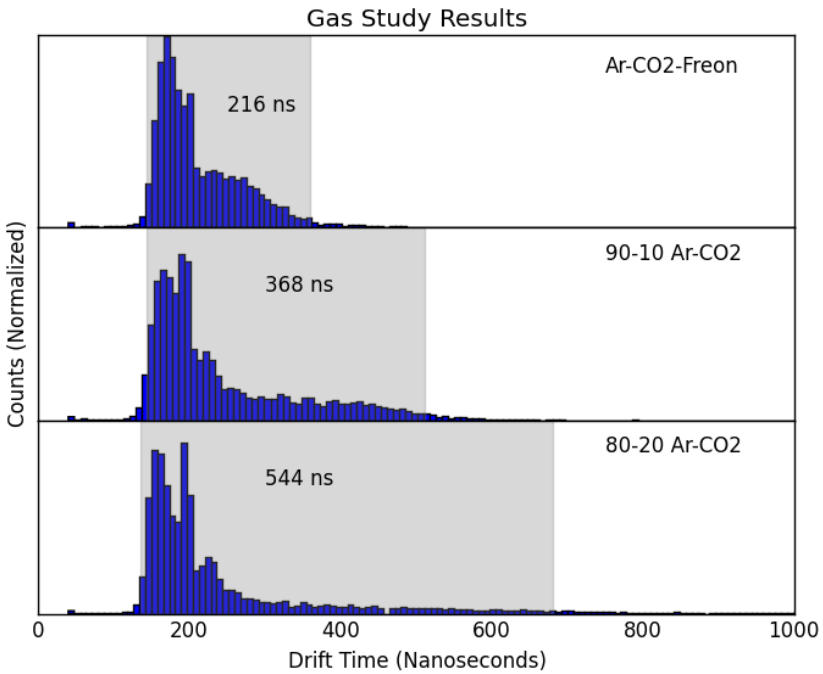
Gas Study Results
Ar-CO2-Freon
216 ns
90-10 Ar-CO2
368 ns
80-20 Ar-CO2
544 ns
Counts (Normalized)
0
200
400
600
800
1000
Drift Time (Nanoseconds)

DEWALT
DEWALT
DEWALT

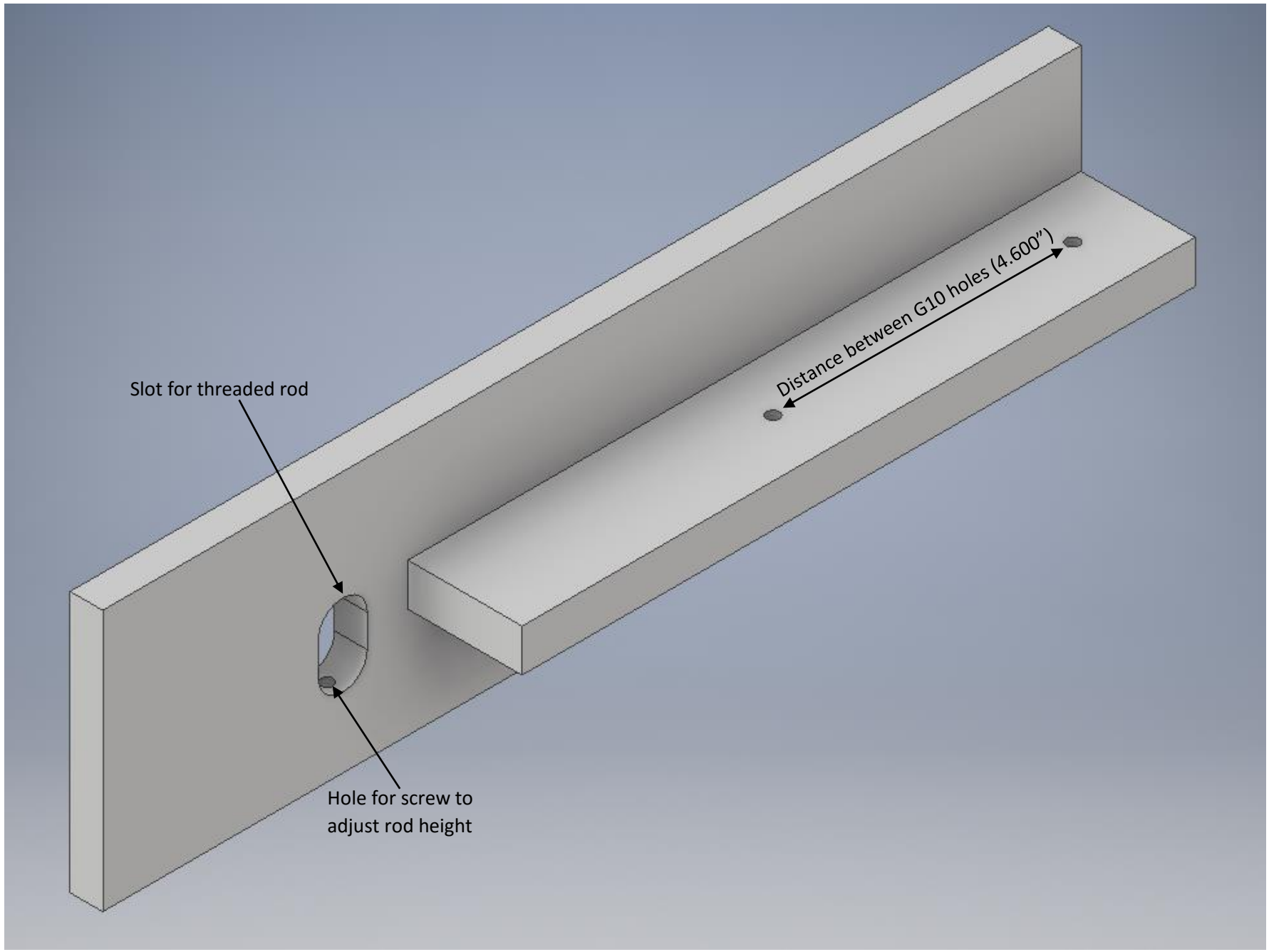
Slot for threaded rod
Distance between G10 holes (4.600")
Hole for screw to
adjust rod height

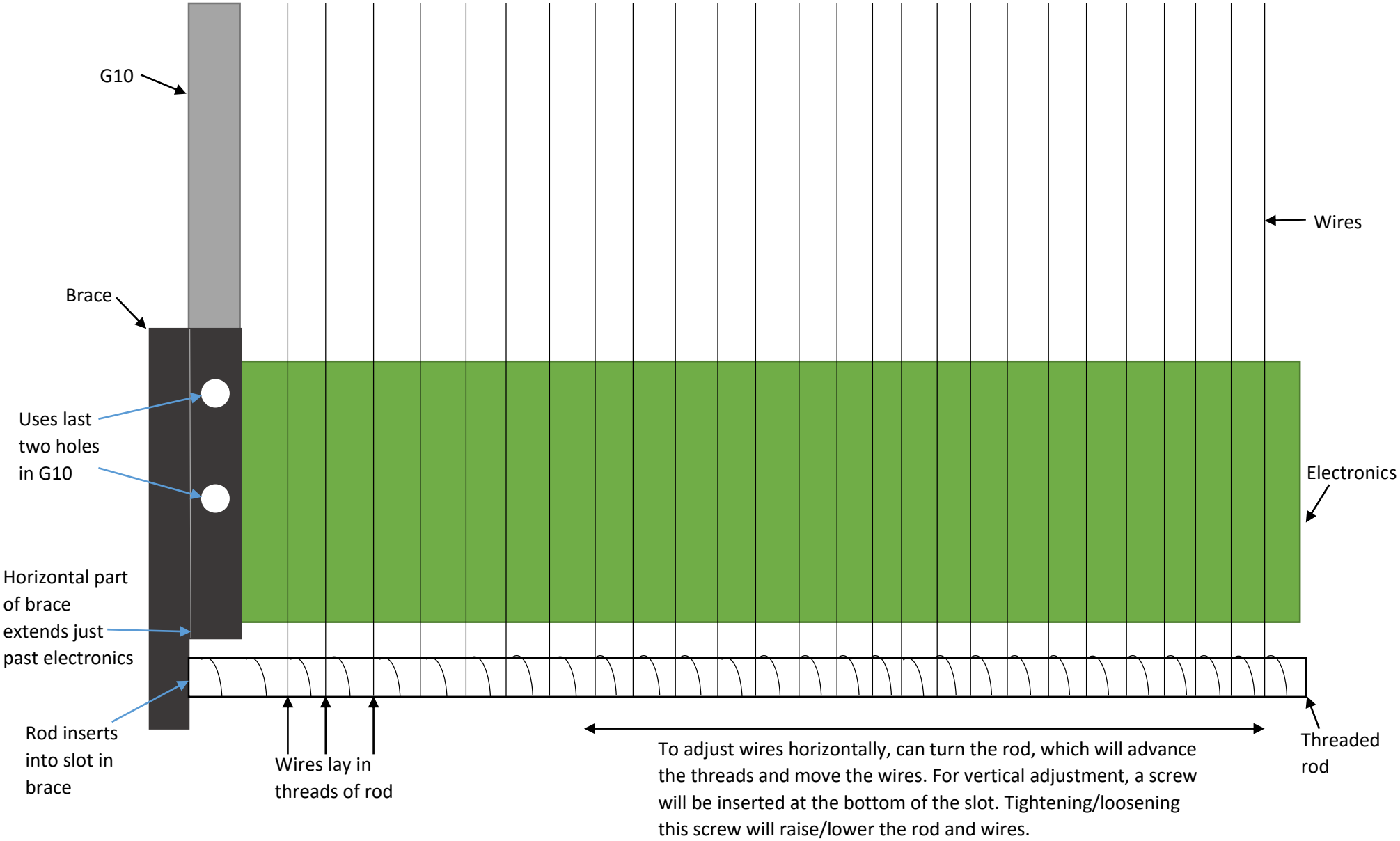
G10
Wires
Brace
Uses last two holes in G10
Electronics
Horizontal part of brace extends just past electronics
Rod inserts into slot in brace
Wires lay in threads of rod
To adjust wires horizontally, can turn the rod, which will advance the threads and move the wires. For vertical adjustment, a screw will be inserted at the bottom of the slot. Tightening/loosening this screw will raise/lower the rod and wires.
Threaded rod